Recommended Lenses for WDR Cameras

Model Numbers:

Arecont Vision MPL33-11
Computar T3Z0312CS-MPIR
Computar A3Z3112CS-MPIR
Computar A4Z1214CS-MPIR
Fujinon YV2.7x2.2SR4A-2
Fujinon YV2.8x2.8SR4A-2
Tamron M13VM288IR

Specification:

Manufacturer	Lens Part Number	Focal Length (mm)	Format	F-Stop	Mount	IR Coated	Fixed/Varifocal	Dimension
Arecont Vision	MPL33-11	3.3-10.5	1/2.5"	1.4	cs	No	Varifocal	ϕ32mm x 38.2mm
Computar	T3Z0312CS-MPIR	3-8	1/3"	1.2	cs	Yes	Varifocal	ϕ40mm x 55mm
Computar	A3Z3112CS-MPIR	3.1-8	1/2.7"	1.2	cs	Yes	Varifocal	ϕ40mm x 55mm
Computar	A4Z1214CS-MPIR	12.5-50	1/2.7"	1.4	cs	Yes	Varifocal	ϕ49 mm x 58.2 mm
Fujinon	YV2.7x2.2SR4A-2	2.2-6	1/2.7"	1.3	cs	Yes	Varifocal	ϕ48.8 mm x 56.9 mm
Fujinon	YV2.8x2.8SR4A-2	2.8-8	1/2.7"	1.3	cs	Yes	Varifocal	ϕ40.8 mm x 54.1 mm
Tamron	M13VM288IR	2.8-8	1/3"	1.2	cs	Yes	Varifocal	ϕ43.2 mm x 51.3 mm

*Other MPL lenses not recommended for use with WDR cameras.

Horizontal Field of View:

Manufacturer	Lens Part Number	Horzontal FOV			
		AV3116DN		AV2116DN	
		Wide	Tele	Wide	Tele
Arecont Vision	MPL33-11	78°	24°	73°	22°
Computar	T3Z0312CS-MPIR	85°	33°	79.6°	30.9°
Computar	A3Z3112CS-MPIR	81.2°	33°	76.1°	30.9°
Computar	A4Z1214CS-MPIR	20°	5.3°	18.7°	4.9°
Fujinon	YV2.7x2.2SR4A-2	113°	43°	106°	40.3°
Fujinon	YV2.8x2.8SR4A-2	93°	33°	87°	31°
Tamron	M13VM288IR	92°	24°	86°	22.5°

Arecont Vision MPL33-11

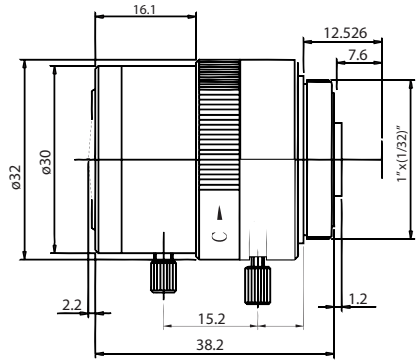

Computar T3Z0312CS-MPIR
A3Z3112CS-MPIR

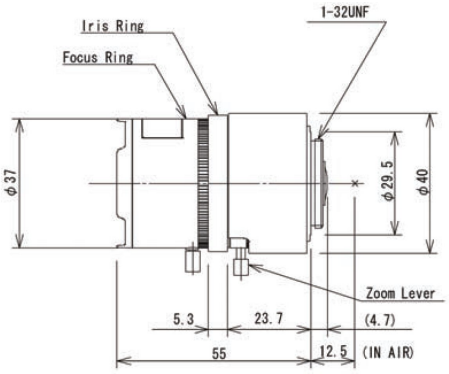

Computar A4Z1214CS-MPIR

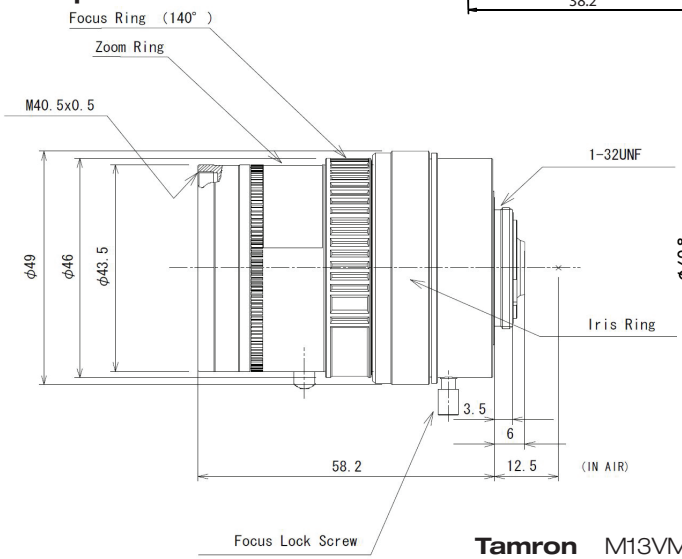

Fujinon YV2.8x2.8SR4A-2

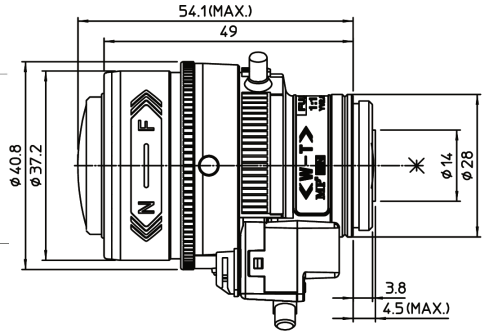

Fujinon YV2.7x2.2SR4A-2

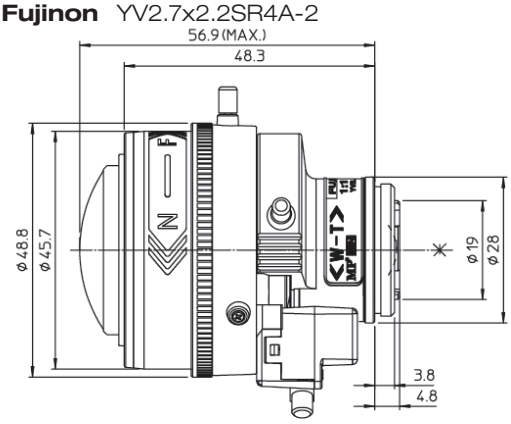

Tamron M13VM288IR

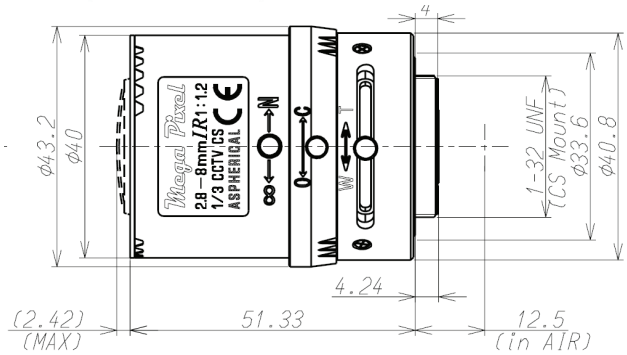

Arecont Vision
megapixel technology...
beyond imagination

Specification sheets subject to change without notice Revised 7.27.12 ©2011 Arecont Vision